AKRON BIO

octapharma®

METHODS OF USE

Virus Inactivated Human AB Serum (viHABS) Closed System Solutions (CSS)®

Bags (60 mL) Cat. # AR1048-0060 | Bags (100 mL) Cat. # AR1048-0100

General:

Akron's Virus Inactivated Human AB Serum (viHABS) Closed System Solutions (CSS)® is packaged in sterile ethylene vinyl acetate (EVA) bags with multiple connection options to support integration into closed system cell culture bioprocessing workflows. The packaging enables contained transfer of the serum into culture media, helping reduce the need for open handling during processing.

Use appropriate aseptic technique when handling Akron's viHABS CSS. Do not place heavy objects directly on top of the viHABS CSS bag, as excessive pressure may compromise package integrity. Each unit is supplied in a protective overpouch, and multiple units are packaged in a storage cassette. It is recommended that units remain in the cassette during storage and thawing.

Thawing:

Akron's viHABS CSS is supplied frozen and should be stored at –20 °C. Prior to use, thaw the product as follows:

- Remove the required units from –20 °C storage while keeping them in the protective cassette.
- Immediately transfer the units to a 2 - 8 °C refrigerator and thaw for 24 hours.
- After 24 hours, remove the units from the 2 - 8 °C refrigerator and allow product to reach room temperature.
- If additional warming is required, place the units in a controlled 37 °C environment until the desired temperature is reached.
- Remove sealed bag pouches from the cardboard cassettes and discard the cassette.
- Sanitize the overpouch exterior with IPA then remove the overpouch using the tear tab.
- Connect the bag to your process line using one of the methods described below.

Optional Heat Inactivation:

Akron's viHABS CSS product is supplied ready to use as a cell culture supplement. For certain cell types or applications, heat treatment may improve cell culture performance by reducing complement activity. When heat treatment is desired or required for a specific application, a well established condition is to heat the serum to 56 °C for 30 minutes. Prolonged or excessive heating is not recommended, as it may alter or denature heat sensitive serum proteins and other components that support cell growth.

Note on Precipitates:

Precipitates may form in some serum units during thawing. This is a common characteristic of serum products and is not considered indicative of compromised product quality. The product is sterile filtered prior to filling, and each lot is tested for mycoplasma and sterility in accordance with applicable USP methods.

Method 1 – Weldable Connection:

Akron's viHABS CSS comes with a single proximal tube that splits into two shorter distal tubes used for an inlet and an outlet. Do not attempt welding to the longer proximal tube section; it is not weldable material.

The shortest tube has been used as an inlet tube and has been fuse sealed at the end. It is not recommended to use this portion.

The second distal portion comes with a rolling clamp and a female Luer lock adapter on the end. This portion is recommended to use as an outlet tube. This outlet tube is made from weldable polyvinyl chloride (PVC) material (2.5 mm ID x 4.1 mm OD). To make a weldable connection to viHABS CSS, follow the steps outlined below:

- Place outlet tubing into tube welding machine along with process line.
- Run standard aseptic welding protocol.
- Release the rolling clamp on the outlet tube now welded to your process line.
- Allow solution from viHABS CSS bag to flow into your process line.
  - User can facilitate transfer by hand compressing the bag to expunge the Human AB Serum material.
  - User can allow for reverse flow to ensure full mixing of serum solution with culture media.

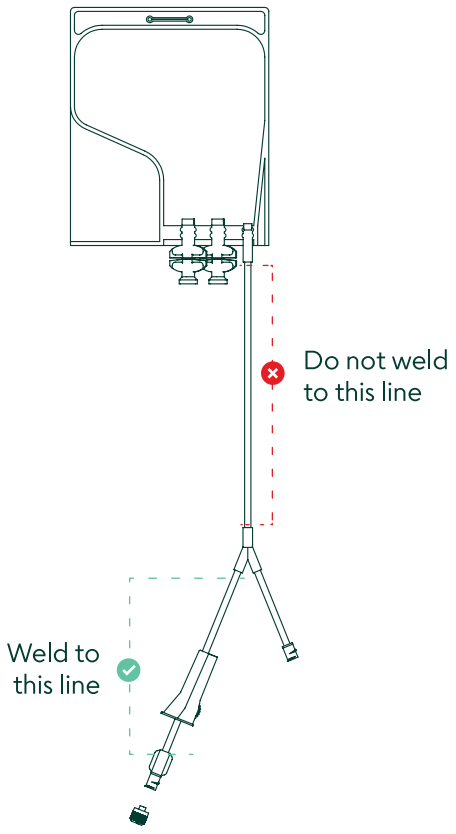

Method 2 - Direct Connection via Female Luer Lock Adapter

Akron's viHABS CSS comes with a direct connection option on the outlet tube. To attach male Luer tubing to the female Luer adapter for use as an outlet port, follow the steps outlined below:

- Introduce the viHABS CSS bag along with the male Luer tubing into a BSC in an aseptic manner.
- Remove cap from the female Luer adapter.
- Clean the female Luer adapter with a pre-moist 70% alcohol wipe.
- Clean the male Luer connection with a fresh pre-moist 70% alcohol wipe.
- Connect male Luer tubing to female Luer connector, turning to lock into place.
- Release the rolling clamp on the outlet tube now directly connected to the male Luer tubing.
- Allow solution from viHABS CSS bag to flow into your process line.
  - User can facilitate transfer by hand compressing the bag to expunge the viHABS CSS material.
  - User can allow for reverse flow to ensure full mixing of viHABS solution with culture medium.

Method 3 – Spike Port Adapter:

Two tear-off EVA spike ports are included as optional outlets. With the use of a spike adapter, these ports allow the user's desired tubing material and desired connectors to be attached to the product. To make a spike port connection to Akron's viHABS CSS, follow the proceeding steps:

- Introduce the viHABS CSS bag along with the desired spike adapter into a BSC in an aseptic manner.
- Tear off the protective EVA tab from chosen spike port (the port has another internal membrane seal).
- Insert a sterile spike, with desired adapter connections attached, into the port in a single continuous motion, puncturing the inner seal and fully inserting the spike into the bag.
- Connect your process line to the inserted adapter using the weldable tubing or direct connectors attached.
- Release any clamp that may be attached to the adapter tubing.
- Allow solution from viHABS CSS bag to flow into your process line.
  - User can facilitate transfer by hand compressing the bag to expunge the Human AB Serum material.
  - User can allow for reverse flow to ensure full mixing of serum solution with culture media.

For more information on our available products or for technical assistance, see contact info below.
For contract orders under master supply agreement, please inquire.